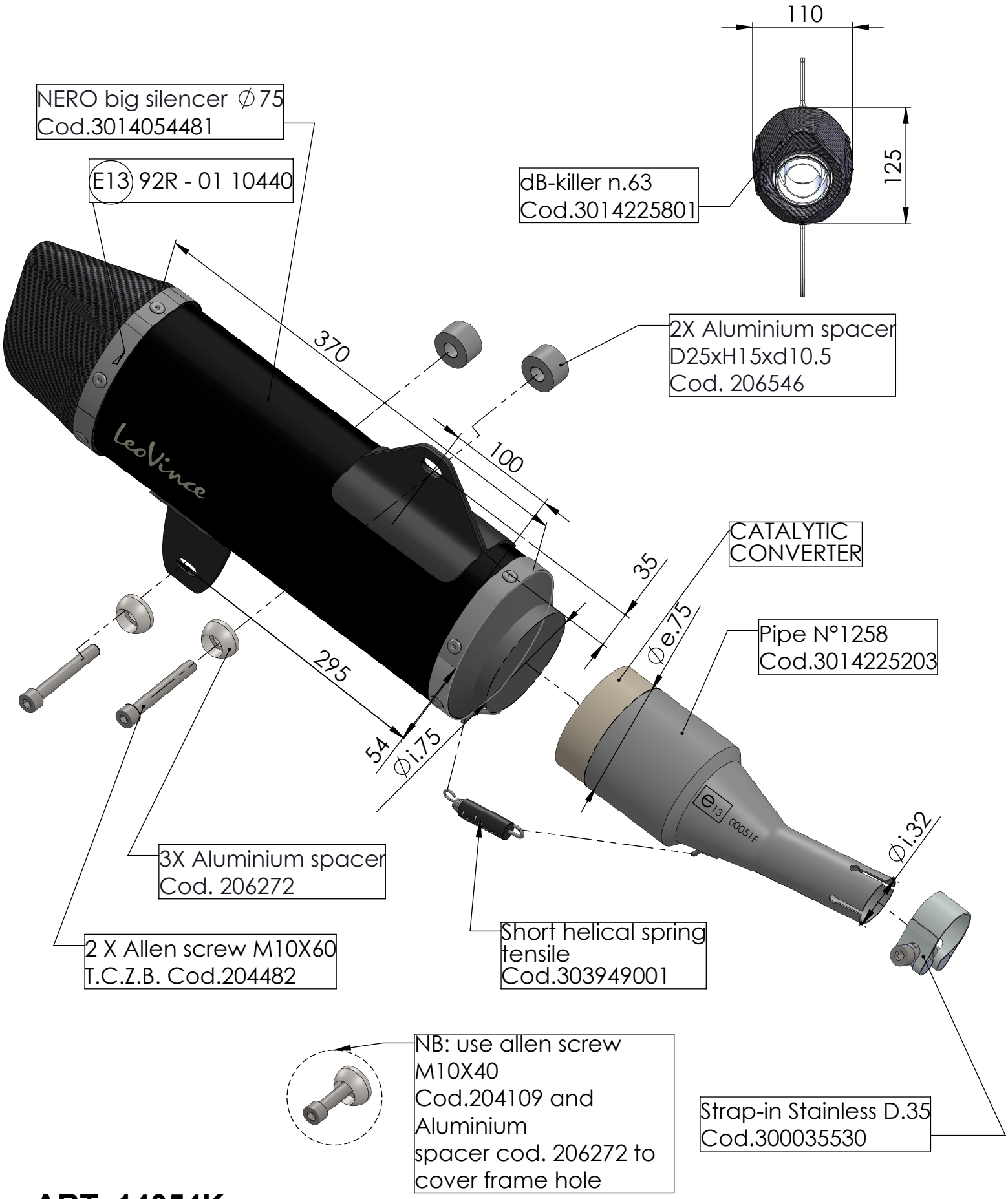

ART. 14054K

YAMAHA X-MAX 300 / IRON MAX

SLIP ON - NERO - STAINLESS STEEL - APPROVED